Pot-and-pan drawer set OrgaFlex, height 144

- **Powder-coated steel, silver**

- For utilising the space below the sink
- The freely positionable and removable plastic containers provide additional storage space to the right and/or left of the waste trap and flexibly adapt to the specific situation they are used in.

Optional accessories, see pages 1111 – 114
- Aluminium rear panel
- Decorative profile
- TopSide in steel, plastic or glass

Components

1 Pot-and-pan drawer set with railing
2 Quadro drawer runner, see page 1315
3 OrgaFlex accessories
4 OrgaFlex containers
A Front
B Bottom panel (material 16 mm thick)
C Wooden rear panel (material 16 mm thick)

1 Pot-and pan drawer with railing

Set comprises:
- 1 drawer side profile, left and right
- 2 front connectors for drawer side profile with expanding dowel
- 2 cover caps, grey plastic with Hettich logo
- 2 lengthwise railings
- 2 front connectors for lengthwise railing with expanding dowel
- 1 rear panel connector, left and right

Nominal length mm	Order no.	PU
470	**0 013 220**	1 set
520	**0 013 221**	1 set
620	**0 013 222**	1 set

3 OrgaFlex accessories

Set comprises:
- 2 aluminium profiles
- 2 rear panel retainers, grey plastic
- Fixing material

Order no.	PU
9 134 643	1 set

4 OrgaFlex containers

- 500 / 600 mm carcase width = 2 containers
- 800 mm carcase width = 3 containers
- 900 mm carcase width = 4 containers
- Maximum loading capacity 3 kg
- Plastic, grey

Order no.	PU
9 053 342	1 ea.

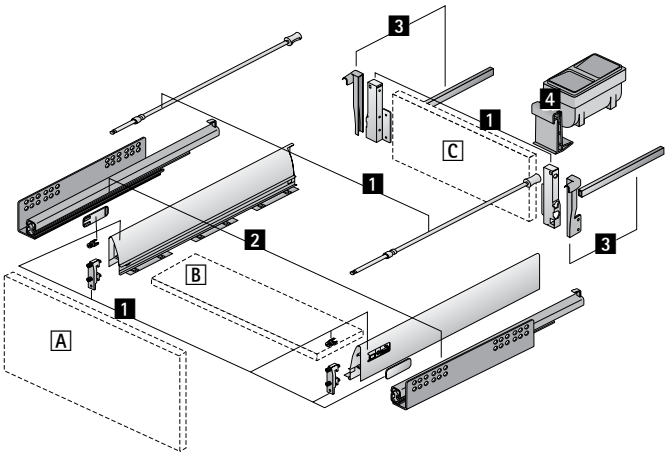

Advice

Technical Information, see pages 1347, 1350 -1365
Quadro drawer runner, see page 1315

Preassembled pot-and-pan drawer, see pages 1134 - 1135